E-TYPE

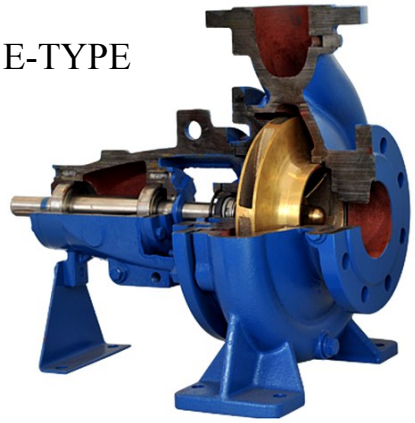

EC-TYPE

Application

The Xcelflo® E-Series centrifugal pump is suitable for handling water and similar liquids mainly used in the following applications.

- -Water Supply
- -Air conditioning
- -Irrigation
- -Pressure boosting
- -Fire Protection
- -Heating and ventilating
- -Industrial

Operating Data

		50Hz	60Hz
Pump sizes		32mm to 250mm	
Flow	up to	340L/s	288L/s
Head	up to	140m	108m
Temperature	up to	95°C	
Speed	up to	2900 rpm	3600 rpm
Pressure	up to	1600kPa	

Construction

Horizontal, single stage, end suction with vertical discharge, complying with the requirements of EN 733 (DIN 24255). Most models are suitable for 1600kPa (16 bar) pressure except for larger pumps that are rated for 1000kPa (10 bar). The back pull out design allows for the maintenance of the pump without disturbing the pipework connected to the casing, or the pump alignment.

Flanges

Pump flanges have raised faces and are to standards AS/NZS 4331.2, ISO 7005.2 16 bar. Gauge tappings are provided on suction and discharge flanges as standard.

Impellers

The shrouded impellers have front seals and, either back vanes or rear seals with balance holes to provide hydraulic balance. Impellers are dynamically balanced, are keyed to the shaft and are located axially between the sleeve and impeller nut. Zinc free bronze impellers are fitted as standard.

Casing

All pump casings are cast iron and radially split to permit removal of the rotating element. The vertical centre line discharge makes the casing self venting. Zinc free bronze wear rings are fitted as standard.

Shaft

Stainless steel shafts are standard and are ground to fit the impeller, sleeve, bearings and coupling.

Bearings

Grease Lubrication – Standard Oil Lubrication – for high speed models (EH) Max. Pump Temperature 95ºC. The Bearing arrangement consists of two identical single row deep groove ball bearings which are grease lubricated through grease nipples located in each bearing cover.

Shaft Seal

The shaft sealing is carried out by means of mechanical seal with the option of packed gland.
Mechanical Seal - A single mechanical seal, with a ceramic stationary face and carbon rotating face is fitted as standard. The standard seal elastomer is nitrile and is suitable for up to 95ºC temperature applications. The other seal components are AISI 304 stainless steel.
Options: Balanced seal – option M1
Cyclone separator – option S1
Gland Packing - Fitted with removable lantern ring and square plaited packing. Packing is fitted over the sleeve toprevent shaft wear.

Painting

Prior to painting, the pump is thoroughly cleaned of scale, weld splatter and any other foreign material. The pump is then painted with a high quality industrial enamel paint.

Accessories

Drive

The pump is only recommended for direct drive via a flexible spacer coupling. Spacer couplings enable the utilisation of the back pull out feature.
Where belt drives are necessary a separate jack (intermediate) shaft with bearings to carry the belt loads may be required. All drive systems, where supplied by Xcelflo, are appropriately protected by suitable guards.

Baseplate

Baseplates for electric drives are available in a variety of styles:

Standard
- Fixed and grouted directly to the foundation.

Anti Vibration
- Rigid baseplate on rubber mounts.
- Rigid baseplate on spring mounts.
- Rigid baseplate with inertia block base and spring mounts.

The baseplate is manufactured or fabricated from either cold formed (pressed) steel plate or from rolled steel channel sections.

Pump Selection

For pump selection the hydraulic performance curves should be used. These curves are based on water at 15oC and SG equal to 1.0.

NPSH values are indicated on the performance curves. At least 0.5m should be added as a safety margin. To overcome variations between actual and design system requirements it is recommended that the driver power exceeds the absorbed pump shaft power.

Absorbed Pump Shaft [kW]	Driver Power Reserve
Up to 7.5	Approx. 20%
7.5 - 40	Approx. 15%
Above 40	Approx. 10%

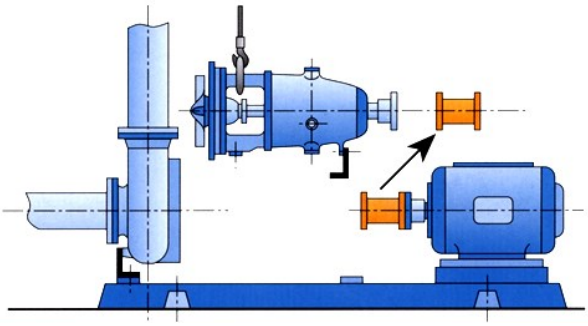

BACK PULL-OUT FEATURE

This design feature allows the complete rotating element to be removed for servicing without disconnecting pipe work. If a spacer coupling is fitted then motor does not have to be moved. On re-assembly of pump coupling re-alignment problems are completely eliminated.

MATERIALS OF CONSTRUCTION

	Bronze Fitted	Cast Iron	All Iron
Casing	Cast Iron	Cast Iron	Cast Iron
Impeller	Bronze	Cast Iron	Cast Iron
Wear Ring	Cast Iron	Cast Iron	Cast Iron
Shaft	Stainless Steel	Stainless Steel	Stainless Steel
Shaft Nut	Bronze	Bronze	Cast Iron
Shaft Sleeve	Stainless Steel	Stainless Steel	Stainless Steel
Lantern Ring	Cast Iron	Cast Iron	Cast Iron
Gland	Cast Iron	Cast Iron	Cast Iron

MATERIALS SPECIFICATION

Material	Nearest Equivalent Standard			
	Australian	British	American	DIN
Cast Iron	AS 1830/T200	BS1452: GR 220	ASTM A48 Class 30	DIN 1691 GG 20
Bronze	AS 1565/836B	BS1400: LG2	ASTM B145 CDA836	DIN 1705
Stainless Steel	AS 1444 GR 420	BS 970: 420/S37	AISI420	DIN 17440

Selection Chart

n=2900rpm

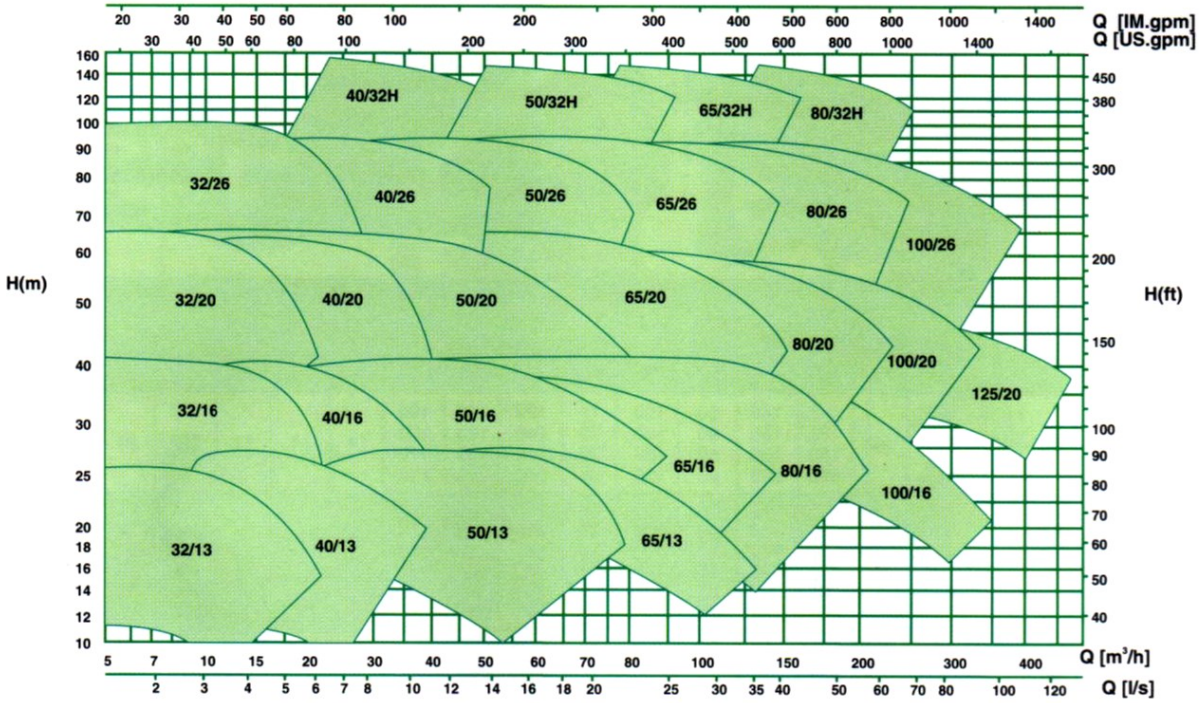

n=1450rpm

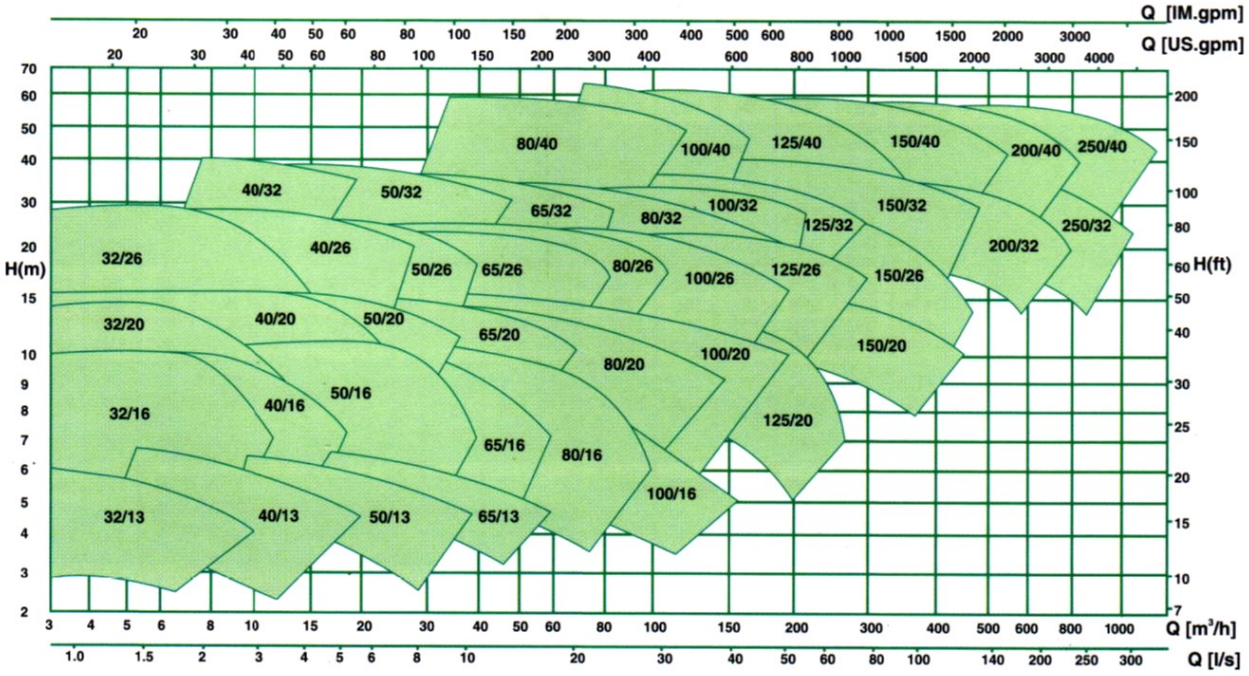

Xcelflo®

EC Type
Close-Coupled Pump

Design Features

STANDARDISED DESIGN
The EC - Series are close coupled versions of the widely recognised E - range which is designed and manufactured to the International Standard DIN 24255.

OPERATING TEMPERATURES
With standard Mechanical Seal - minus 20˚C to 100˚C. Mechanical Seals are available for applications outside these limits.

OPERATING PRESSURES
Maximum operating pressure 1600kPa.
Maximum test pressure up to 2100kPa.

(Maximum pressures will vary depending on particular pump model - higher ratings available on application).

BACK PULL-OUT FACILITY
All pumps incorporate the “Back Pull-out” facility allowing the removal of the complete rotating element without disturbing the pipework. This feature enables quick and simple maintenance to take place.

INTERCHANGEABILITY
Many of the components are interchangeable resulting in a reduction in spares requirements, and an initial cost saving.

MOTOR OPTIONS
The design of the range means that readily available standard electric motors are used. Alternatively, a motor to suit your particular specifications can be fitted where special protection classes and enclosures are required, or to suit a certain power supply (i.e. Weatherproof, flameproof, 60Hz).

MAXIMUM SPEED
Either 50Hz (1450rpm/2900rpm) or 60Hz (1750/3500rpm) speed motors can be supplied with impellers reduced to comply with the higher speeds.

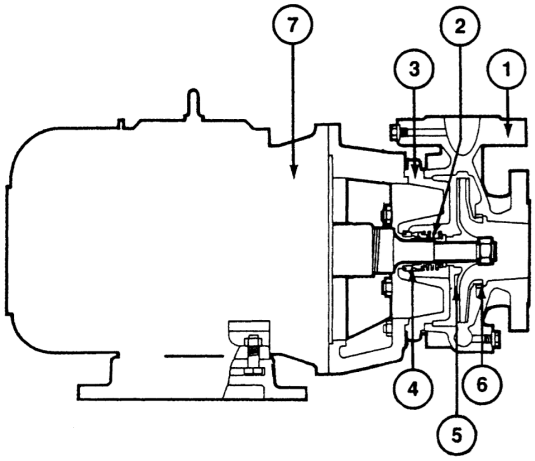

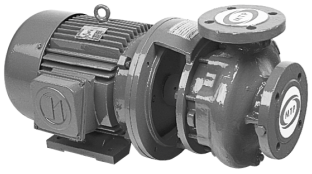

① Flanged Cast Iron casing.
② Mechanical seal fitted on stainless steel shaft sleeve.
③ The back pull out feature of this pump allows removal of the motor, support frame and impeller, without disturbing the suction and delivery pipe work or the casing.
④ Mechanical seal complies to the VDMA International Dimension Standard.
⑤ Double shrouded hydraulically balanced impeller with rear balancing vanes on smaller sizes, and balance holes with replaceable wear rings on larger sizes.
⑥ Every casing is fitted with a replaceable wear ring.
⑦ Use of standard motors allows for easy replacement.

Applications

- *Cooling Water*
- *Pressure Boosting*
- *De-Watering*
- *Fire Protection*
- *Plumbing*

Material Options

CODE	CASING	IMPELLER	STUB SHAFT	SHAFT SLEEVE	WEAR RING
2	Cast Iron	Bronze	Stainless Steel	Stainless Steel	Cast Iron
1	Cast Iron	Cast Iron	Stainless Steel	Stainless Steel	Cast Iron